Race Start Controller
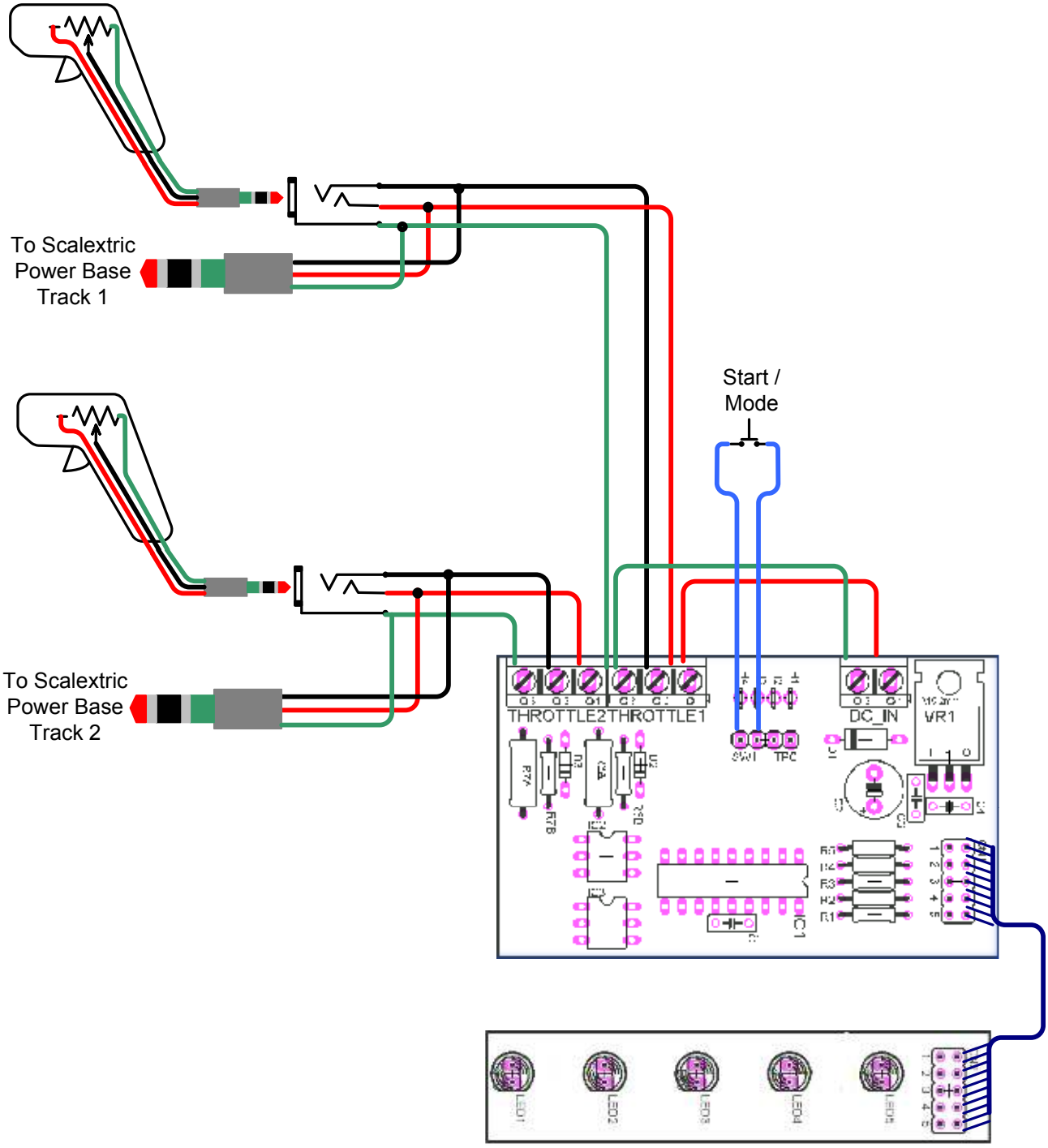
Wiring for use with standard Scalextric power supply and power base