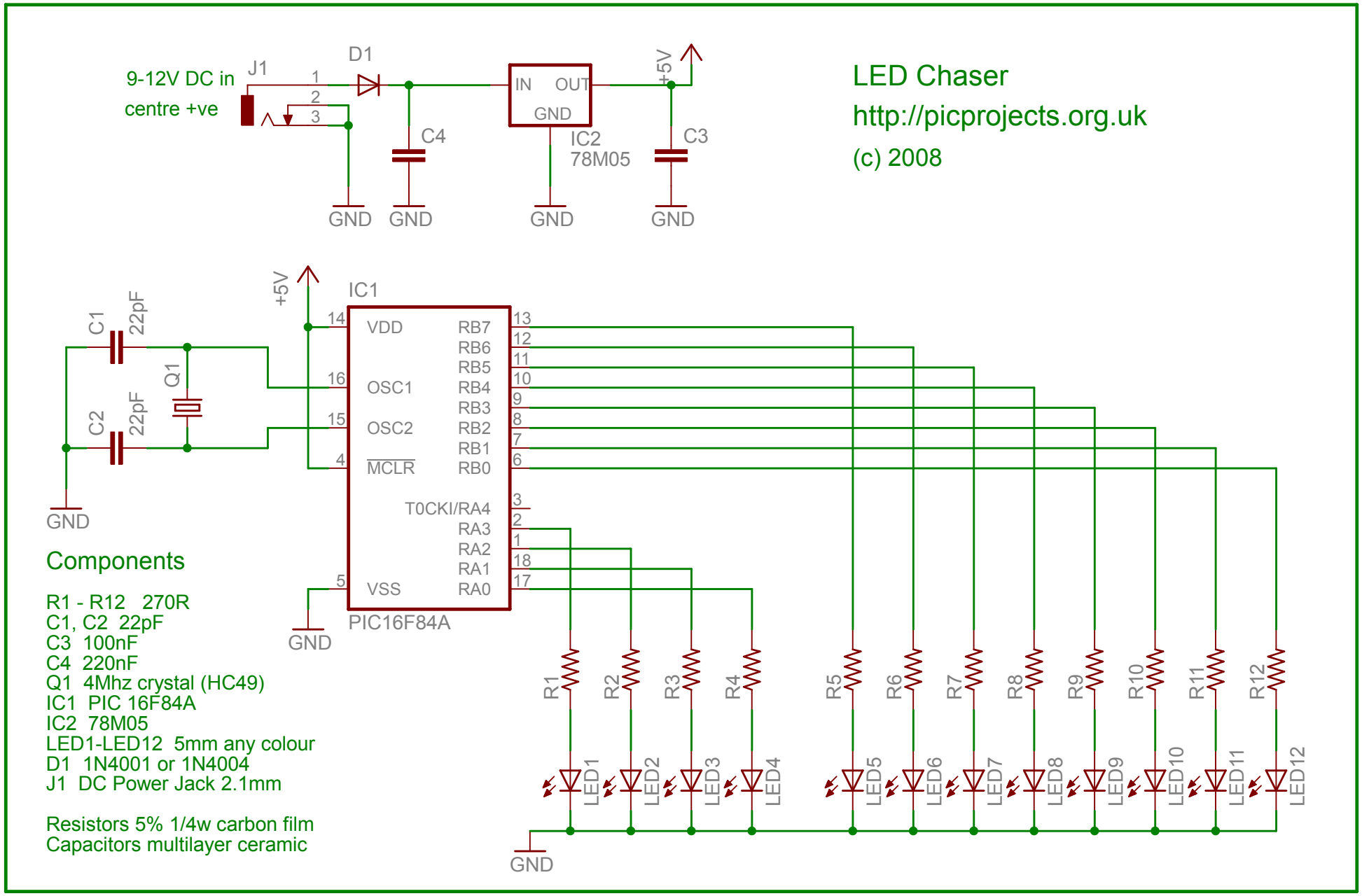

Components

R1 - R12 270R
C1, C2 22pF
C3 100nF
C4 220nF
Q1 4Mhz crystal (HC49)
IC1 PIC 16F84A
IC2 78M05
LED1-LED12 5mm any colour
D1 1N4001 or 1N4004
J1 DC Power Jack 2.1mm

Resistors 5% 1/4w carbon film
Capacitors multilayer ceramic