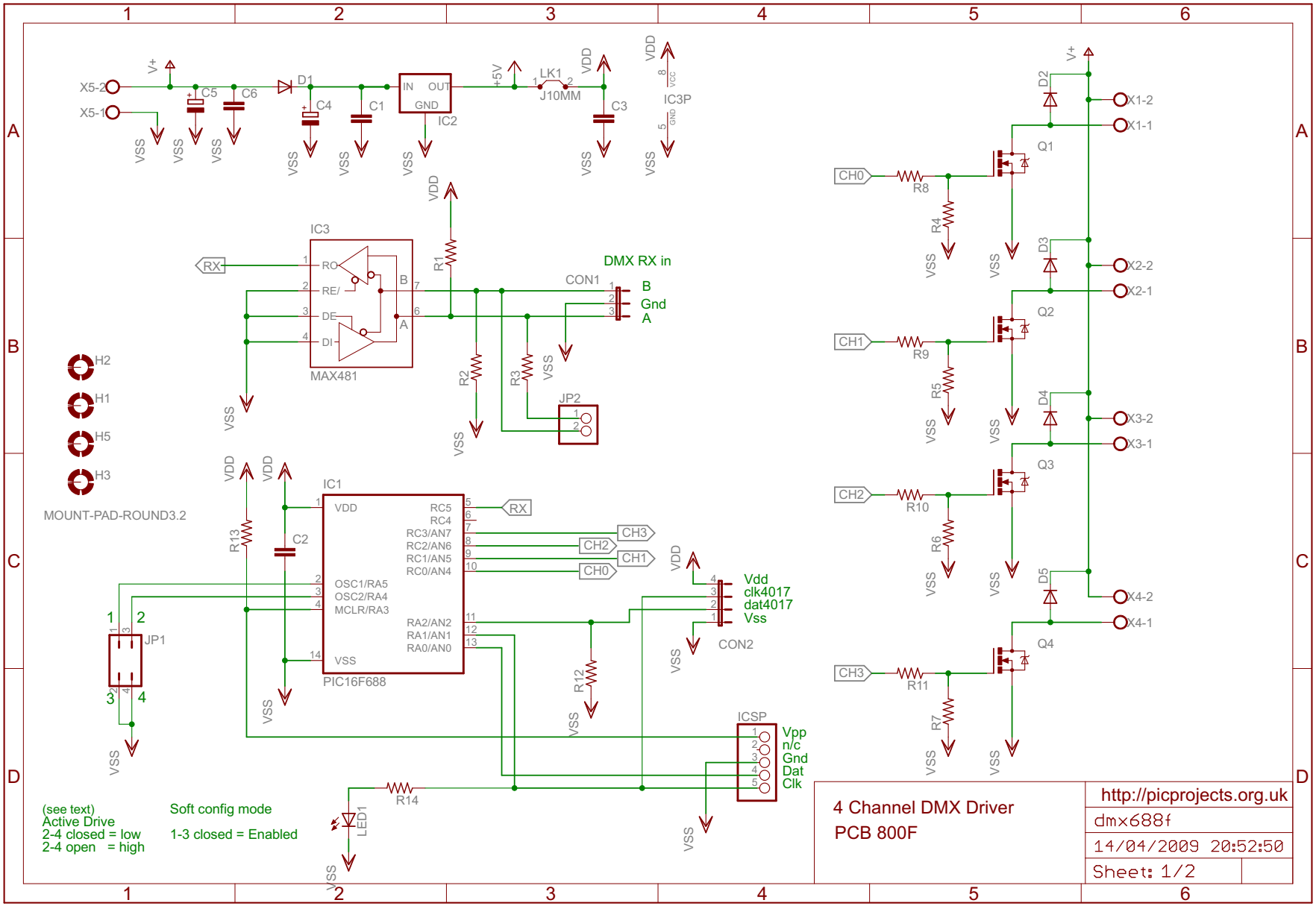

Components

R1, R2 Not installed

R3 120R

R4,5,6,7 10K

R8,9,10,11 120R

R12,13 10K

R14 330R

C1 220nF (see text)

C2,3 100nF

C4 10uF 25V

C5 47uF 25V

C6 100nF

D1 1N4148

D2,3,4,5 1N4001 (see text)

Q1,2,3,4 STP36NF06L

IC1 PIC16F688 (needs programming)

IC2 78L05

IC3 MAX485 (75176, ST485, SP485)

LED1 5mm standard LED

LK1 wire link (PCB only)